ID351

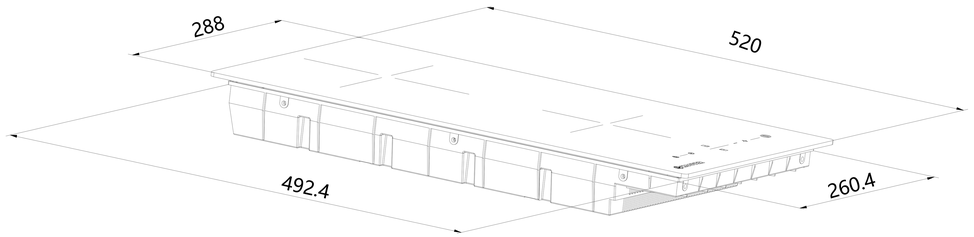
288
520
492.4
260.4

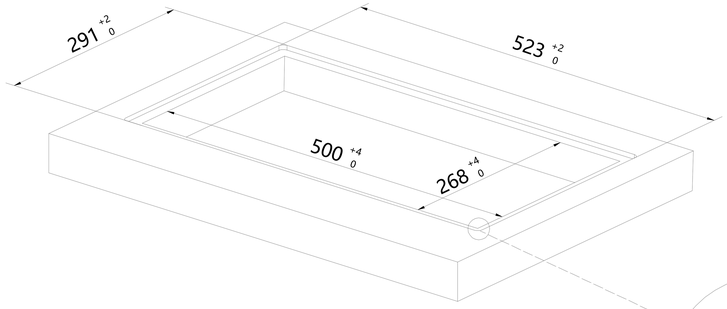
291 0
523 +2 0
500 +4 0
268 +4 0

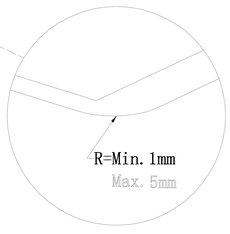
R=Min. 1mm
Max. 5mm

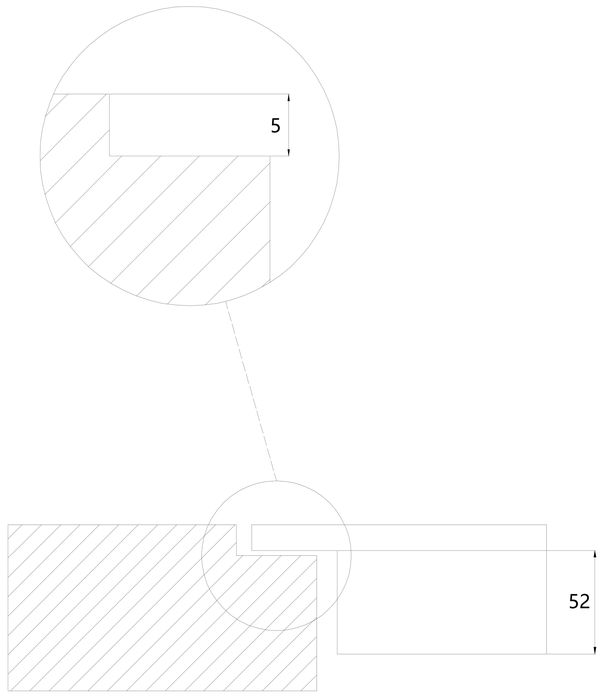
5
52

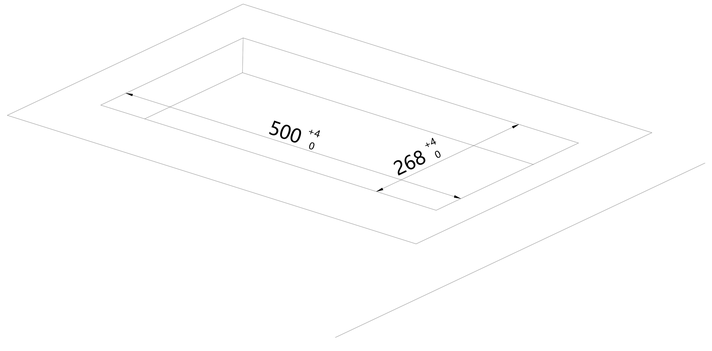
500 +4 0
268 +4 0